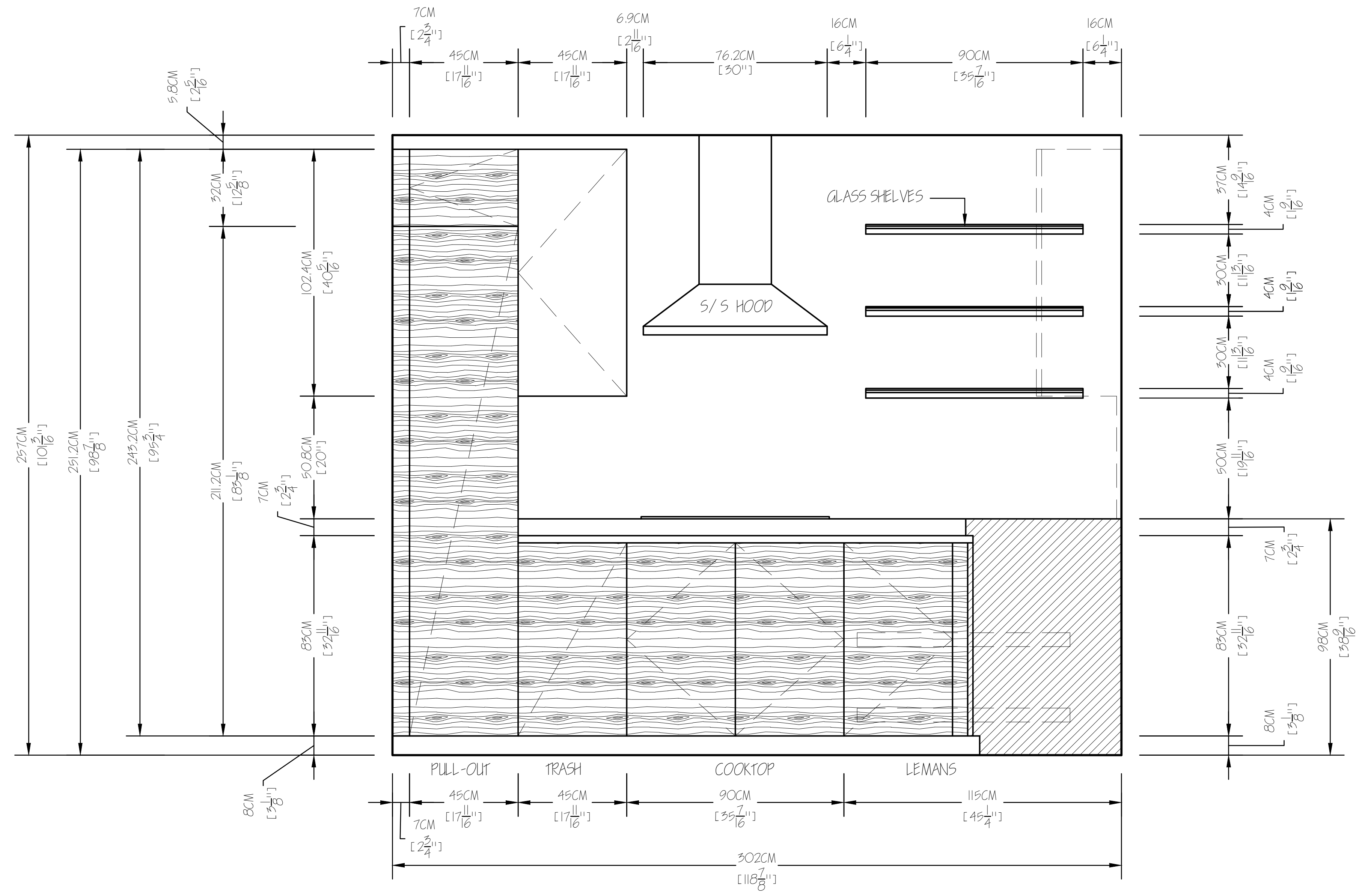

ELEVATION 1/K1
SCALE:1/2"=1'-0"

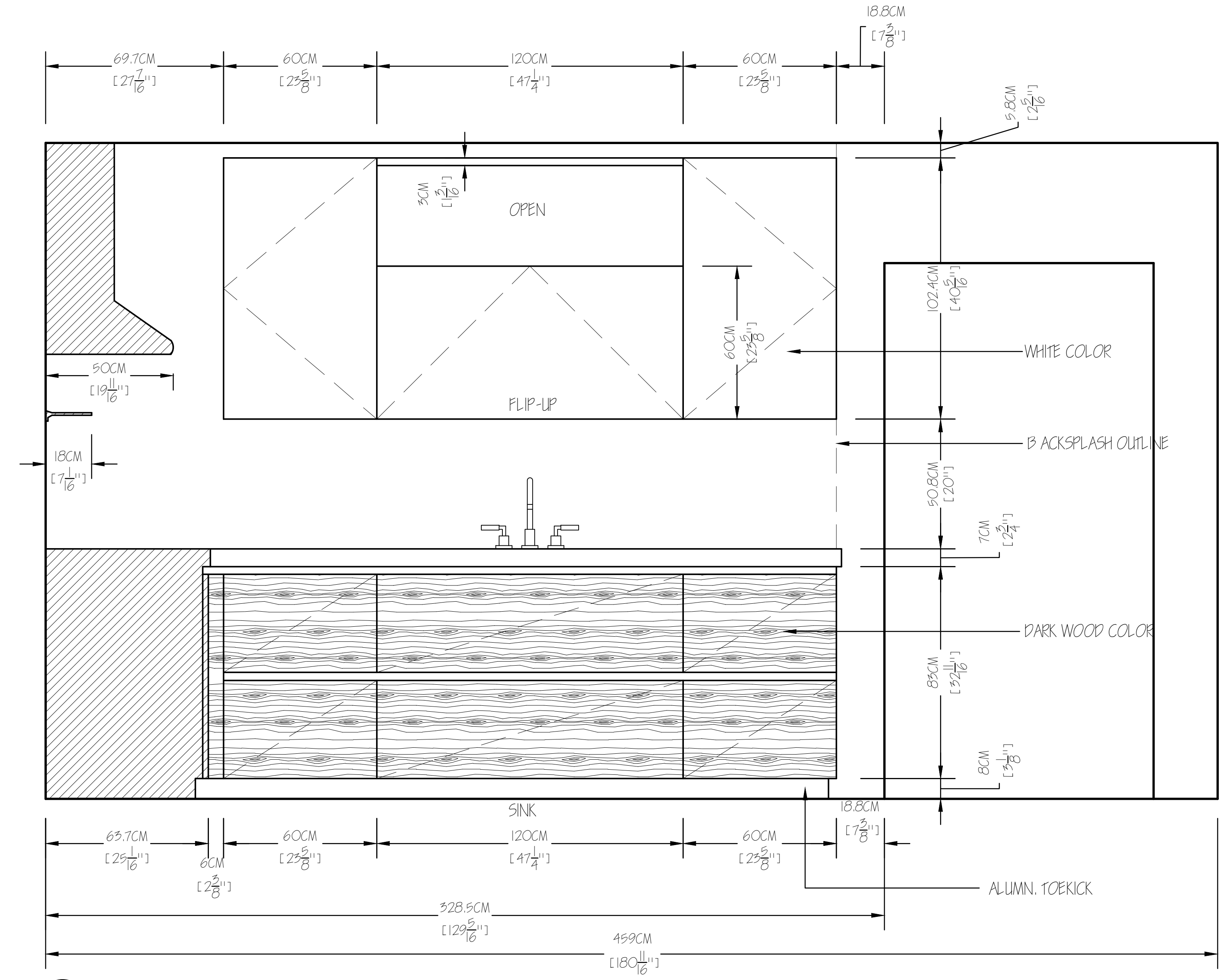

ELEVATION 2/K1
SCALE:1/2"=1'-0"

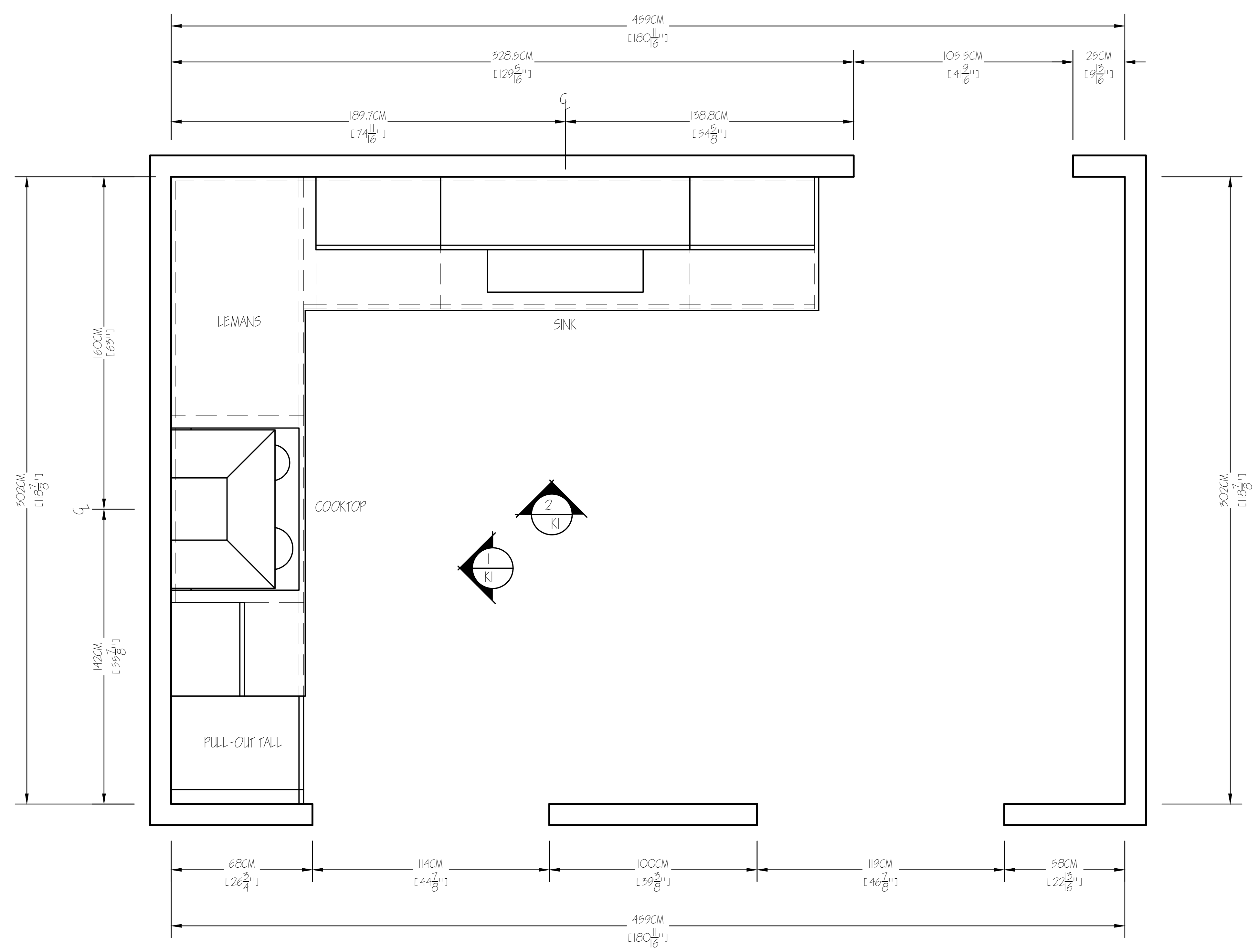

PLAN K1
SCALE:1/2"=1'-0"

NOTE: IT IS VERY IMPORTANT THAT THE CONSTRUCTION CONFORMS TO THE DIMENSIONS SHOWN IN THESE DRAWINGS. KUCHE+CUCINA WILL NOT BE HELD RESPONSIBLE FOR ANY ADDITIONAL EXPENSE RESULTING FROM CABINETRY ALTERATIONS AND/OR CONSTRUCTION WORK NECESSARY IN THE EVENT THAT THE DIMENSIONS SHOWN IN THESE DRAWINGS ARE NOT MET.

CLIENT'S SIGNATURE/DATE: ____________________

KÜCHE+CUCINA
KITCHENS AND FINE INTERIORS
489 ROUTE 17 SOUTH, PARAMUS, NJ 07652
PHONE: 201.261.5221 FAX: 201.261.0966
WWW.KUCHE-CUCINA.COM

CABINETRY INFORMATION

MANUFACTURER	PEDINI MAGIKA
FRAME CONSTRUCTION	-
BASE DOORSTYLE	-
WALL DOORSTYLE	-
DRAWER FACE 1	-
DRAWER FACE 2	-
SPECIES	-
FINISH	-
CABINET INTERIORS	-
TOP MOLDING	-
LIGHT VALANCE	-
TOEKICKS	-
GLASS INSERTS	-
HARDWARE	-
HARDWARE POSITIONING	-

ACCESSORIES

-	-
-	-
-	-
-	-
	-
	-

APPLIANCES

BRAND/MODEL

COUNTERTOP INFORMATION

MAGIKA DISPLAY

DATE: 03/02/19

SCALE: 1/2"=1'-0"

FLOORPLAN

REVISION DATES: -

DWG NO: K1

1 OF 2